E128 A
Hermetic BCS

**A stove featuring an innovative design with a raised firebox to enjoy the beautiful view of the fire even more. Cladded in Steel with the top in Majolica, available in Bianco or Nero Opaco. Adjustable, front hot air vent Also available in an airtight version with combustion air drawn from the outside and with the BCS System. **

GENERAL FEATURES

•Heating: Natural convection / Ductable forced ventilation
•Front ventilation: adjustable vent on version with Multifuoco System®
•Cladding: steel
•One-piece firebox: airtight in steel
•Firebox: Aluker®
•Flue gas deflector / Brazier: Aluker® / cast iron
•Door / Handle: cast iron with ceramic glass resistant to 750°C / steel and silicone
•Removable ash pan: yes
•Humidifier: optional
•Standard flue outlet position: top or rear
•Pre-heated primary and secondary air: by electronic control
•Pre-determined tertiary air: pre-heated
•Glass cleaning: continuous air flow
•Burn Control System: yes
•Ash vacuum cleaner: optional
•Installation: wall - corner

TECHNICAL DETAILS

•Energy efficiency class A+
•Rated output max kW 11,0
•Rated efficiency power % 87,2
•Rated consumption max kg/h 2,8
•Weight kg 242
•Standard flue outlet Ø cm 15
•Model E128 A BCS

COVERS

BIANCO | NERO OPACO | NERO OPACO

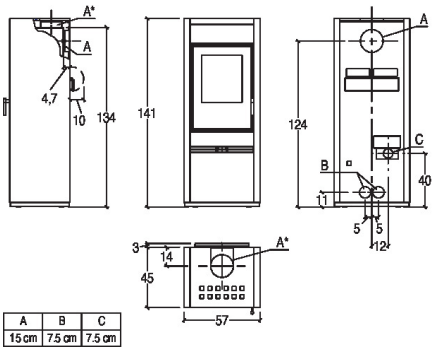

A	B	C
15 cm	7.5 cm	7.5 cm

PIAZZETTA
PASSIONE ACCESA