IP 7 M

**Piazzetta's IP 7 M is a pellet-burning fireboxe mounted on rails for an easy extractable loading system, which eliminates any necessity for add-on loading applications and internal inspections. **

GENERAL FEATURES

•Heating:
•Structure: coated steel with closed firebox, that can be removed on sliding runners
•Firebox: cast iron
•Brazier: cast iron
•Opening: door in cast iron, self-cleaning ceramic glass resistant to 750°C
•Handle: concealed detachable handle
•Function control:
•Timer-controlled thermostat with programming:
•Standard flue outlet position:
•Fuel: pellets

TECHNICAL DETAILS

•Energy efficiency class A+
•Weight kg 113
•Standard flue outlet Ø cm 8
•Model IP 7 M
•Mouth of firebox (W) - Minimum dimensions of mouth of cladding cm 70
•Mouth of firebox (H) - Minimum dimensions of mouth of cladding cm 50

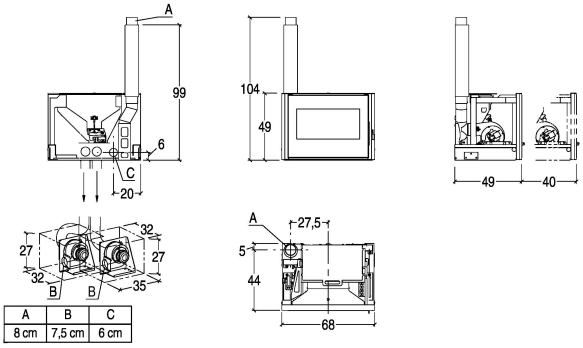

A	B	C
8 cm	7,5 cm	6 cm

PIAZZETTA
PASSIONE ACCESA