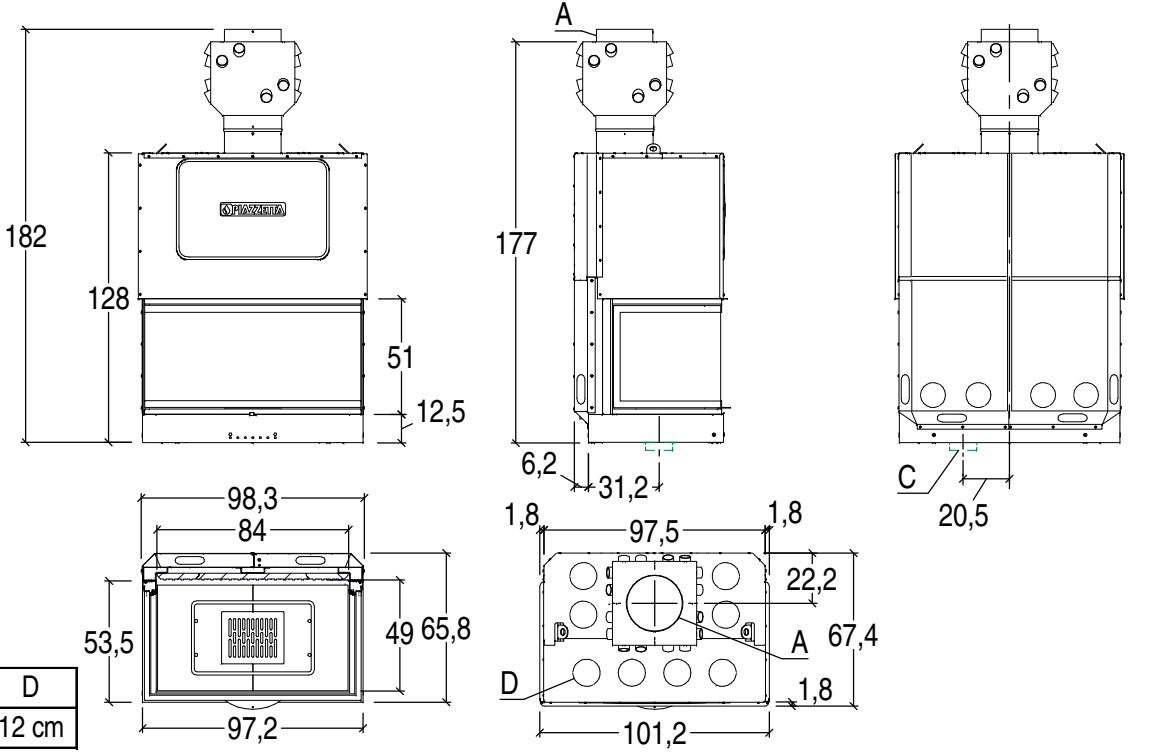

A	C	D
25 cm	12 cm	12 cm